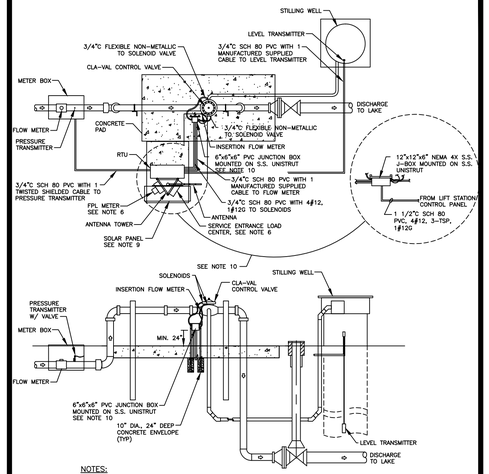

NOTES:

1. MAST AND METAL STRUCTURE SHALL BE GROUNDED IN ACCORDANCE WITH NEC SECTION 810-21.
2. ANTENNA INSTALLATION SHALL MEET THE WIND LOADING REQUIREMENT PER FLORIDA BUILDING CODE.
3. MINIMUM ANTENNA HEIGHT SHALL BE 12 FEET. IF ANY OBSTRUCTION IS LOCATED BETWEEN THE RADIO COMMUNICATION PATH, ANTENNA HEIGHT SHALL BE HIGHER THAN THOSE OBSTRUCTIONS.
4. CONDUITS SHALL NOT ENTER THE TOP OF CONTROL PANEL.
5. ALL ELECTRICAL PANELS SHALL BE GROUNDED.
6. METER AND SERVICE ENTRANCE RATED LOAD CENTER ARE NOT REQUIRED IF THE RTU IS SUPPLIED BY SOLAR POWER OR NEARBY LIFT STATION POWER.
7. ALL MOUNTING HARDWARE SHALL BE 316 STAINLESS STEEL.
8. MAINTAIN 36" CLEARANCE IN FRONT OF ALL ELECTRICAL PANELS.
9. SOLAR PANEL IS NOT REQUIRED IF 120 VAC POWER IS AVAILABLE.
10. FOR SHARE RTU/POWER CONFIGURATION, TOWER, METER AND LOAD CENTER ARE NOT REQUIRED. A LARGER 12"x12"x6" NEMA 4X S.S. J-BOX IS REQUIRED IN LIEU OF 6"x6"x6" J-BOX. SEE PAGE 44R FOR RTU SHARING BETWEEN LIFT STATION AND RECLAIMED WATER.

RECLAIMED WATER SYSTEM
ELECTRICAL LAYOUT

42R

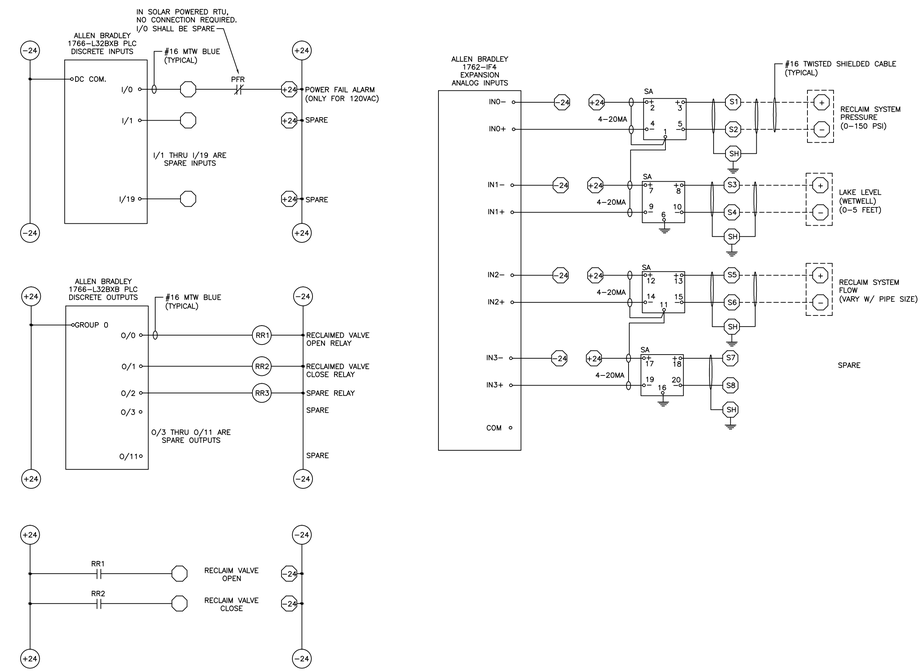

RECLAIMED WATER SYSTEM
PLC INPUT/OUTPUT WIRING

43-44R

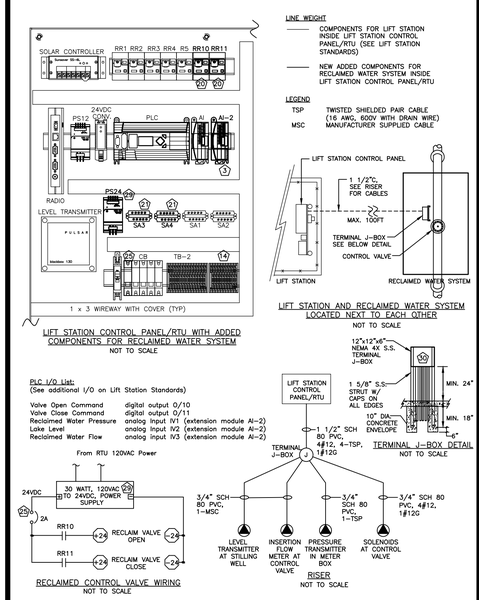

RTU SHARING BETWEEN LIFT STATION AND RECLAIMED WATER SYSTEM

45R

RECLAIMED WATER #5
STANDARD DETAILS

CONSULTANT:

IT'S THE LAW !
CALL 48 HOURS BEFORE YOU DIG
1-800-432-4770
SUNSHINE STATE ONE CALL OF FLORIDA, INC.
UTILITIES NOTIFICATION CENTER

DESIGNED BY: WUD
DRAWN BY: WUD CADD
CHECKED BY: A. GALICKI
APPROVED BY: WUD

Palm Beach County
Water Utilities Department
P.O.Box 16097
West Palm Beach, FL 33416-6097

PROJECT NO.
00-000

PROJECT NAME

PALM BEACH COUNTY
WATER UTILITIES DEPARTMENT
P.O. BOX 16097
WEST PALM BEACH, FL 33416
(561)493-6000

NO.	DATE	REVISION / REMARKS	BY
	FEB. 2015	GENERAL REVISION	A.G.

STD DETAILS

SHEET NUMBER
0
OF
0

SEAL

Dec 09, 2016